D3724-R mSTX

Industrial Series

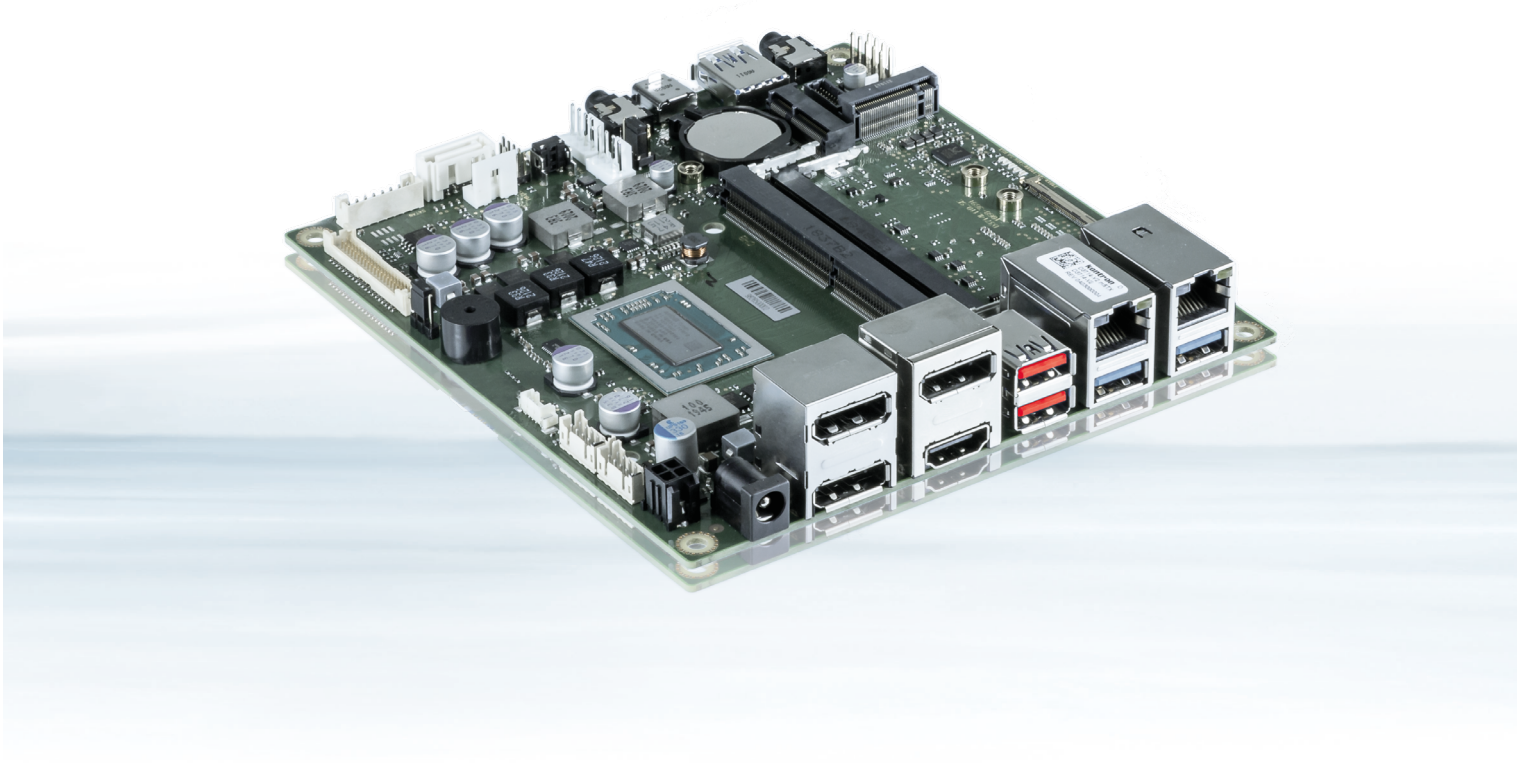

AMD Embedded R2000 Series SoC Platform for AMD FP5 SoC Processor

- AMD Radeon™ Vega Graphics (within SoC)
- Up to 3x DisplayPort V1.4 plus HDMI V2.0b
- Dual Channel LVDS (24 Bit) and eDP V1.3 (4 k) onboard
- Designed for Fanless Operation
- MS Windows 11 Support

POSSIBILITIES START HERE kontron

D3724-R mSTX

Industrial Series

The industrial motherboard D3724-R mSTX supports the AMD Ryzen™ Embedded R2000 series processors with integrated AMD Radeon™ Vega Graphics and can be used in applications with high graphical requirements like casino gaming, medical displays, thin clients and ultra small industrial PCs.

It is equipped with up to three DisplayPorts, one HDMI Port, one embedded DisplayPort and one Dual-Channel LVDS (24bit) and powers up to four independent displays in 4K resolution. Depending on the requirements for (graphical) performance, there are 3 motherboard versions available.

PRODUCT HIGHLIGHTS

- AMD Radeon™ Vega Graphics (within SoC)
- Up to 3x DisplayPort V1.4 plus HDMI V2.0b
- Dual Channel LVDS (24Bit) and eDP V1.3 (4k) onboard
- 8 Bit GPIO & HD Audio onboard
- USB 2.0 and USB 3.1 (Gen1/Gen2) onboard
- 1x SATA III onboard
- Onboard support for 1x M.2 SSD (Key-M: 2230/2242/2280)
- Onboard support for 1x M.2 WLAN/Bluetooth (Key-E: 2230)
- Dual GbE LAN onboard incl. Teaming Support
- AMD integrated TPM V2.0 onboard
- Auto Dual Range internal/external DC Input (12 V or 19-28 V)
- HW Watchdog onboard
- RS-232/485/422 support onboard

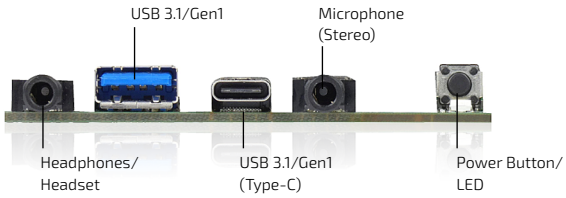

*) Power Button/LED prepared for SMARTCASE™ S511 chassis kit

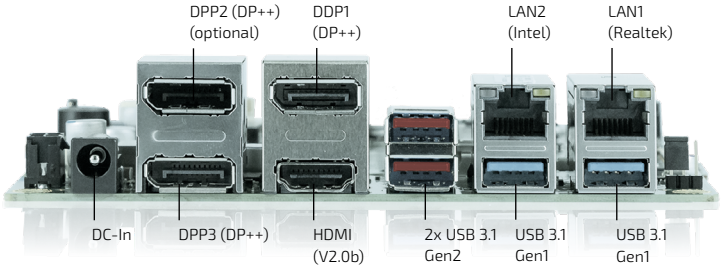

TECHNICAL INFORMATION

SYSTEM	PROCESSOR MEMORY	AMD Ryzen™ Embedded R2000 Series D3724-R3: AMD Embedded R2514 D3724-R2: AMD Embedded R2314 D3724-R1: AMD Embedded R2312 DDR4 2400/2666 SDRAM, Dual Channel 2x SO DIMM sockets, up to 32 GByte memory, ECC/non-ECC
VIDEO	GRAPHICS	AMD Radeon™ Vega Graphics Up to 3x DPP V1.4 incl. DP++ support 1x HDMI V2.0b 1x embedded DP (eDP V1.4; supporting 4K resolutions; shared with DPP1) 1x Dual-Channel 24bit LVDS (shared with DPP3) Following max. display combinations are supported: **D3724-R2/-R3:** 1x DPP + HDMI + LVDS + eDP; 2x DPP + HDMI + LVDS; 2x DPP + HDMI + eDP; 3x DPP + HDMI **D3724-R1:** HDMI + LVDS + eDP; 1x DPP + HDMI + LVDS; 1x DPP + HDMI + eDP; 2x DPP + HDMI
AUDIO	AUDIO CODEC AUDIO INTERFACE	Realtek ALC256 High Definition Stereo Audio Codec front stereo microphone (2.5 mm jack) front headphones/headset (2.5 mm jack, CITA standard)
NETWORK CONNECTION	ETHERNET	Intel® i210 & Realtek RTL8111H with 10/100/1000 MBit/s, Wake-on-LAN (WoL) by interesting Packets, Link Status Change and Magic Packet™, PXE Support, BIOS MAC Address Display, Teaming Support
PERIPHERAL CONNECTION	USB SERIAL PORT OTHER I/Os	2x USB 2.0 (by header), 2x USB 3.1 Gen1 (rear), 2x USB 3.1 Gen2 (rear), 1x USB 3.1 Gen1 (front), 1x USB 3.1 Gen1 (Type C, front) 1x RS232 (by header); 1x RS232/422/485 (by header) GPIO (by header)
STORAGE & EXPANSION	SATA PCIe/PCI SLOTS	1x Serial ATA III 600 Interface (up to 6GBit/s), NCQ, AHCI, 1x M.2 PCIe x4 (Key-M: 2230/2242/2280) 1x M.2 WLAN/Bluetooth (Key-E: 2230, supports PCIe x1/Gen3 + USB 2.0)

TECHNICAL INFORMATION

POWER	CONNECTOR INPUT VOLTAGE	External/Internal DC-In (DC Jack/4-Pin Micro-Fit) DC Input 12 V or 19-28 V, max. 5 A/65 W (external DC-In), max. 10 A/100 W (internal DC-In)
FIRMWARE	BIOS WATCHDOG REAL TIME CLOCK TPM	AMI Aptio 5.x (UEFI) BIOS modified and adapted by Kontron; Recovery BIOS, SM-BIOS (DMI), BIOS Update, Quick Boot, Logo Boot, Quiet Boot, Plug & Play, Automatic DRAM Configuration, BIOS Support for S.M.A.R.T.,Advanced Power Management, ACPI S3/S4, Wake on time from S5. Boot support for M.2 SSD (NVME), Watchdog Support No legacy OS support, no MBR installation (UEFI only) 3 level HW Watchdog (BIOS POST/BIOS Boot/OS) Integrated AMD integrated TPM V2.0
SYSTEM CONTROL	FP HEADER SECURITY	1x Header 2.0 mm pitch; for HDD LED, Power LED, and power button ("Reset" feature not supported) Onboard power button & power LED (for SMARTCASE™ S511 chassis) Recovery BIOS, System and BIOS Password, Boot Sequence Control, Serial-/USB-Port Access Protection, Write Protection for Flash BIOS, EraseDisk (BIOS Feature), AMD integrated TPM V2.0
COOLING	FAN SUPPORT	2x PWM fan (CPU/System)
SOFTWARE	OS SUPPORT	MS Windows 10 / MS Windows 11 Linux-64 No legacy OS support, no MBR installation (UEFI only)
MECHANICAL	DIMENSIONS (L x W)	Mini-STX: 5.5" x 5.8" (140 x 148 mm)
CERTIFICATION	EMC & SAFETY	CE Class-B, UKCA cTÜVus acc. IEC62368-1

MOTHERBOARD VERSIONS

D3724	PROCESSOR (APU) *)	GRAPHICS RADEON™ VEGA	MAX. MEMORY SPEED
-R3	R2514 Quad-Core 2.1/3.7 GHz **) Supported TDP Limits: 35 W ***)/25 W/15 W/12 W	GPU @ 1.2 GHz 8x CU ****) up to 4 displays (eDP, LVDS, HDMI, DPP1, DPP2, DPP3)	DDR4-2666 Two sockets (ECC supported)
-R2	R2314 Quad-Core 2.1/3.5 GHz **) Supported TDP Limits: 35 W ***)/25 W/15 W/12 W	GPU @ 1.2 GHz 6x CU ****) up to 4 displays (eDP, LVDS, HDMI, DPP1, DPP2, DPP3)	DDR4-2666 Two sockets (ECC supported)
-R1	R2312 Dual-Core 2.7/3.5 GHz **) Supported TDP Limits: 25 W ***)/15 W/12 W	GPU @ 1.2 GHz 3x CU ****) up to 3 displays (eDP, LVDS, HDMI, DPP1, DPP3)	DDR4-2400 Two sockets (ECC supported)

*) APU = Accelerated Processing Unit
**) CPU Base Frequency / Boost Frequency
***) Default TDP
****) CU = Compute Units

POWER SUPPLY REQUIREMENTS

SOURCE	VOLTAGE RANGE	MIN. PS LOAD	MAX. VOLTAGE TOLERANCE	TYP. MOTHERBOARD INPUT POWER*	MAX. MOTHERBOARD INPUT POWER**
DC-IN (auto dual range)	12 V/19-28 V	0 A	12 V: +/- 10 %; 19-28 V: +10 %/-15 %	<10 W / <40 W	100 W (external or internal DC-In)

*) Motherboard incl. Memory and M.2 NVME SSD (approximations for MS Windows 10 Idle Mode / Full Processor Load @ 25 W TDP)
**) Motherboard incl. Memory, M.2, USB Devices, LVDS / eDP devices, SATA devices
See TechNotes document for detailed power requirements

TECHNICAL INFORMATION

FEATURES	Chipset / SoC (APU) DPP / HDMI / LVDS / eDP Buzzer / int. Speaker Support (stereo)* / 5.1 Multichannel Audio GbE LAN / Dual GbE LAN / 2.5GbE LAN / M.2 2230 WLAN-BT WoL / PXE / LAN Teaming / TSN SATA / SATA RAID / M.2 (SATA) / M.2 (PCIe/NVME) Mini-PCIe / USB 2.0 / USB 3.1 (Gen1) / USB 3.1 (Gen2) FAN monitored & controlled CPU / AUX1 / AUX2 TEMP monitored CPU / onboard sensors / external sensor	AMD Ryzen™ Embedded + / + / + / + + / + / - + / + / - / + + / + / + / - + / - / - / + - / + / + / + + / + / - + / + / -
SPECIAL FEATURES	COM interface support for RS-232 / RS-485 / RS-422 Silent Fan / System Guard Recovery BIOS / Multi Boot HDD Password / EraseDisk / TPM V2.0 onboard / optional TPM module BIOS POST- / BIOS Boot- / OS- HW Watchdog Operating Mode 24-7 / 8-5 (hrs per day - days per week) Motherboard operating temperature range (chassis inside)**	+ + / + + / + + / + / + / - + / + / + + / - -10 °C ... +60 °C
INTERNAL CONNECTORS	SO DIMM Sockets (DDR4 2400) SATA-III / M.2 Key-M SSD / M.2 Key-B / M.2 2230 WLAN-BT / Mini-PCIe Front Panel Audio (9-Pin, HD Audio) / SP-DIF Out (Digital Audio) USB 2.0 pin header (provides 2 USB channel) / USB Stick socket USB 3.1 Gen1 pin header (provides 2 USB channels) Serial COM1 header / serial COM2 header LVDS / LVDS Backlight / Embedded DisplayPort @ 4 lanes CPU (PWM) / AUX1 (PWM) Intrusion (Case Open) / GPIO (8 Bit) / SMBus (Case Temp.) Stereo Speaker header / Digital Mic header Front Panel (Power Switch, LEDs, Intel 10 pin header, 2 mm pitch) *** SATA Drive Power Connector (5 V/12 V) / DC-In Connector 12 V/19-28 V (4 pin)	1 or 2 1 / 1 / - / 1 / - - / - 1 / - - 1 / 1 1 / 1 / 1 1 / 1 - / 1 / - 1 / - 1 1 / 1
EXTERNAL CONNECTORS	DisplayPort V1.4 / HDMI / DVI / VGA Audio Stereo Mic. In / Headphones (Headset) [Front Connectors] LAN (RJ-45) / PS/2 USB 2.0 / USB 3.1 Gen1 / USB 3.1 Gen2 USB 3.1 Gen1 Type-A / USB 3.1 Gen1-Type C [Front Connectors] DC-In connector (external input) 12 V/19-28 V @ 5 A max. Serial COM interface	up to 3 / 1 / - / - 1 / 1 2 / - 0 / 2 / 2 1 / 1 1 -

*) Stereo speaker support; 2 W @4Ω
**) Forced cooling required for high operating temperature range.
***) Reset switch not supported!
See TechNotes document for details

CONNECTOR / SOCKET DIAGRAM

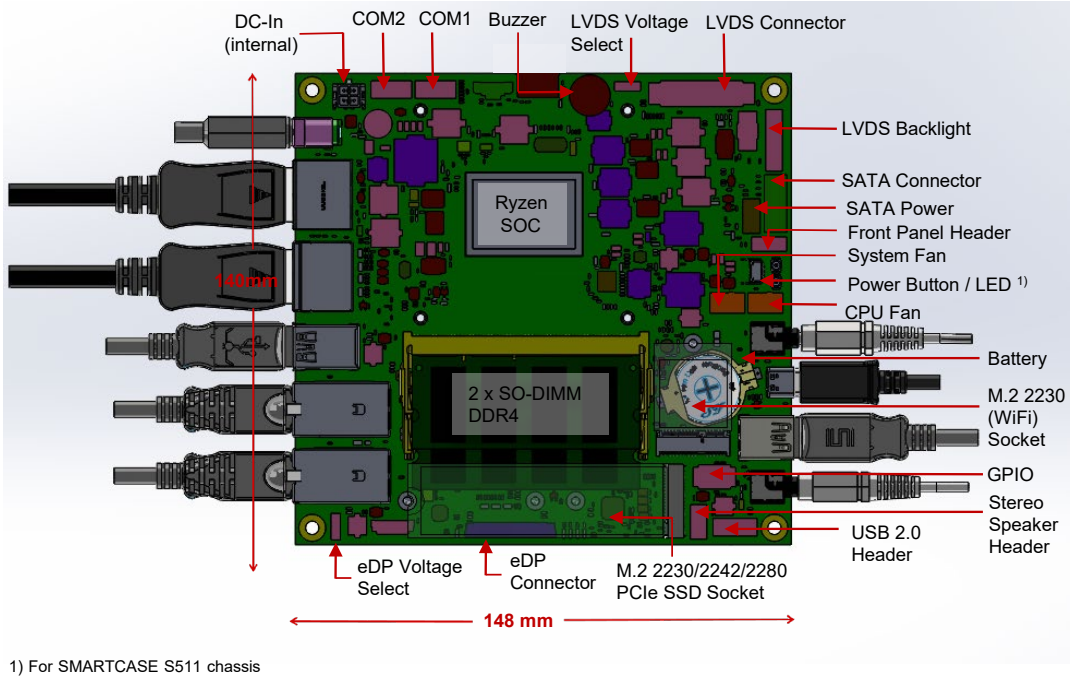

1) For SMARTCASE S511 chassis

ORDERING INFORMATION

ARTICLE	PART NO.	DESCRIPTION
D3724-R3 mSTX*	F5120-V205	AMD Embedded R2514 SoC
D3724-R2 mSTX*	F5120-V204	AMD Embedded R2314 SoC
D3724-R1 mSTX	F5120-V203	AMD Embedded R2312 SoC
ACCESSORIES		
SLIM ACTIVE HEATSINK + BACKPLATE	F5000-C021	max. 35 W TDP
FANLESS HEATSINK + BACKPLATE	F5000-C022	max. 10 W TDP, designed for SMARTCASE™ S511
EXTRA LOW ACTIVE HEATSINK + BACKPLATE	F5000-C023 (planned)	max. 25 W TDP, designed for SMARTCASE™ S511
SMARTCASE™ S511	F5000-J011	Chassis kit for D3714-Rx/D3724-Rx, active or passive cooling
SERIAL PORT CABLE	F5000-K010	400 mm, fullsize slot bracket
SERIAL PORT CABLE	F5000-K007	Short cable (120 mm), w/o slot bracket
AC-ADAPTER 19V/65W	F5000-P006	For applications up to 25 W TDP (SoC)
DRIVE POWER CABLE	F5000-K001	400 mm, power connector for 1x SATA and 1x slimline DVD
WLAN ANTENNA KIT	F5000-W005	WLAN antenna kit; left (grey)/right (black) antennas incl. cable for SMARTCASE™ S500/S511/S520. M.2 WLAN module not included!
VESA MOUNT KIT	F5000-X002	Suitable for SMARTCASE™ S500/S511/S520
WALL MOUNT BRACKETS	F5000-X001	Suitable for SMARTCASE™ S500/S511/S520, 2x Brackets per chassis incl. screws
DC-IN CONNECTOR LOCK	F5000-X003	Suitable for SMARTCASE™ S500/S511/S520, fits to AC-Adapter F5000-P006

*) D2724-R2/D2724-R3 motherboard delivery kit contains an additional SMARTCASE S511 rear panel for replacement. These motherboard models provide four rear display connectors, whereas the standard S511 chassis supports three display connectors only. When using D3724-R2/-R3 in SC-S511, this replacement rear panel has to be used.
Note: The optional rear COM port is not supported then due to missing space.

GLOBAL HEADQUARTERS

Kontron Europe GmbH

Gutenbergstraße 2
85737 Ismaning, Germany
Tel.: + 49 821 4086-0
Fax: + 49 821 4086-111
info@kontron.com

www.kontron.com

Copyright © 2022 Kontron. All rights reserved. All data is for information purposes only and not guaranteed for legal purposes. Information has been carefully checked and is believed to be accurate; however, no responsibility is assumed for inaccuracies. Kontron and the Kontron logo and all other trademarks or registered trademarks are the property of their respective owners and are recognized. Specifications are subject to change without notice. D3714-V/R mSTX-20221115- bmy